Round 3 - Saturday, September 24, 2022

SHOTLINK

Presidents Cup

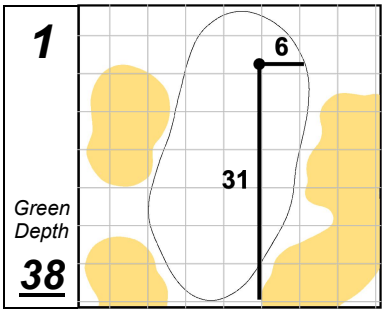

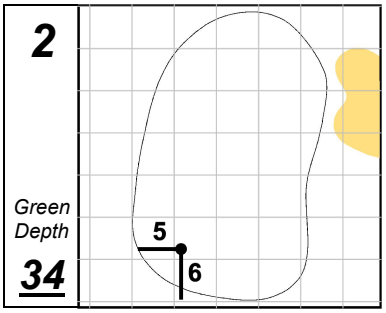

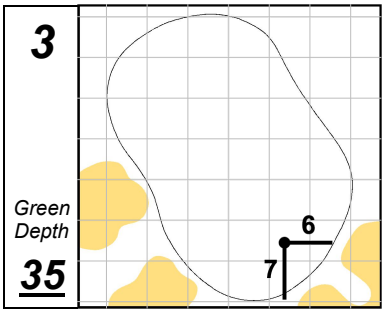

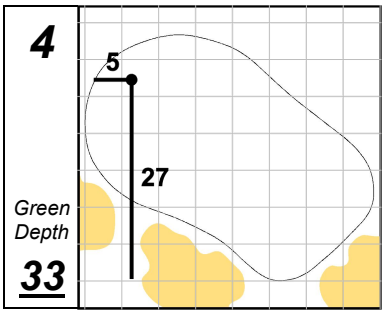

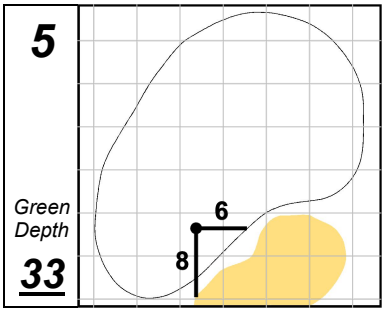

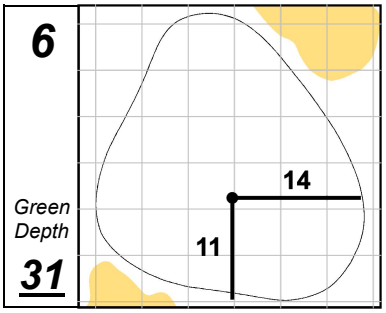

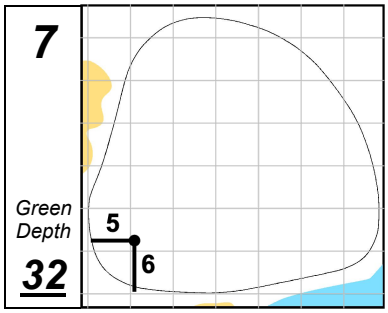

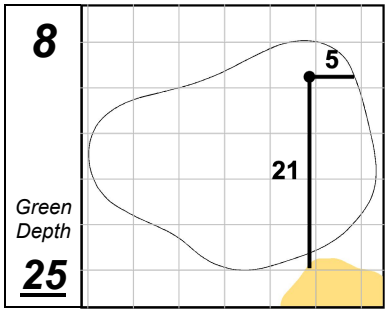

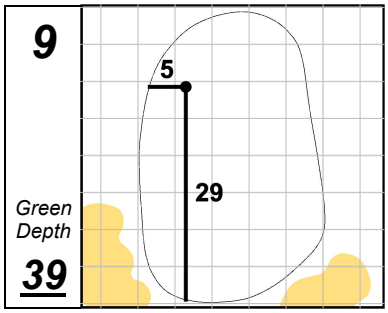

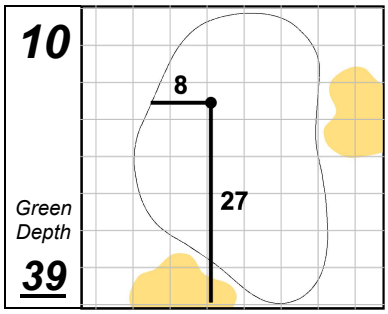

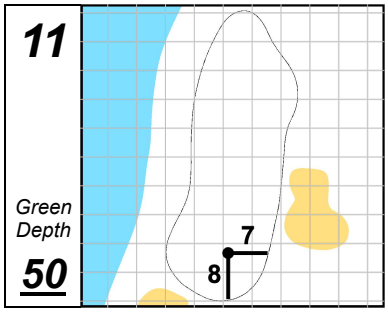

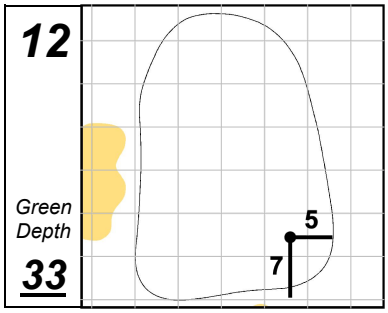

Quail Hollow Club

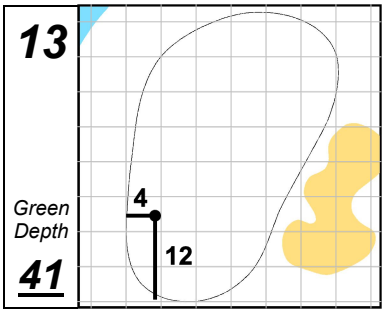

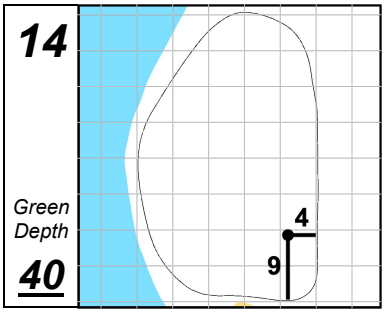

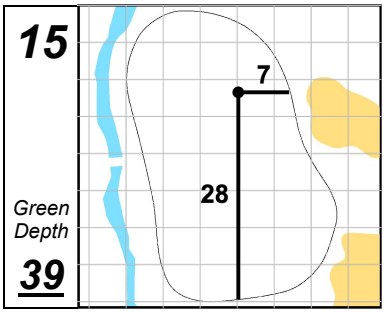

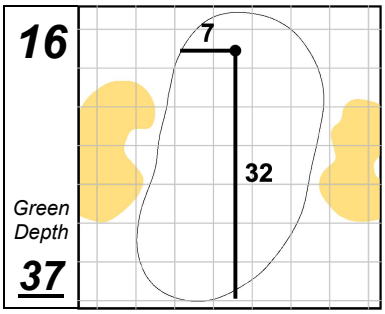

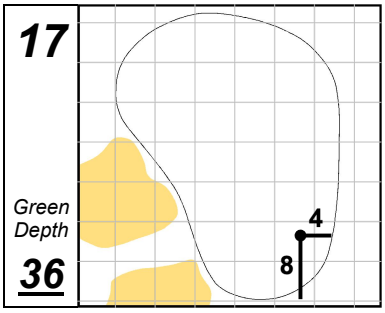

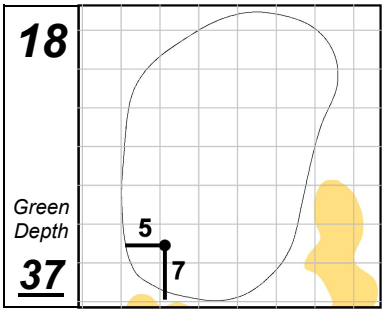

Each side of a complete square on the green represents 5 YARDS.

Friday, September 23, 2022 11:11:53 AM